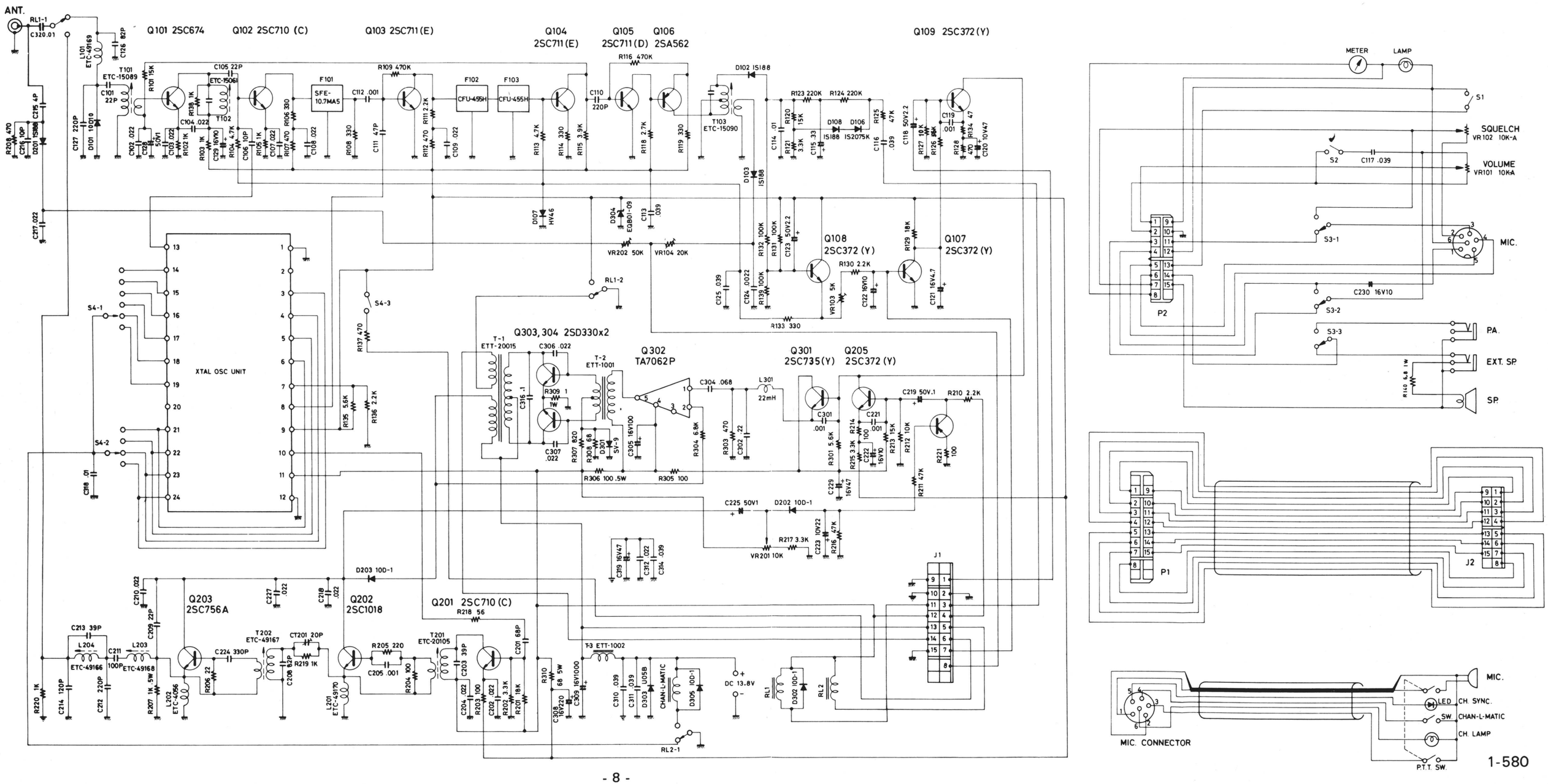SCHEMATIC DIAGRAM