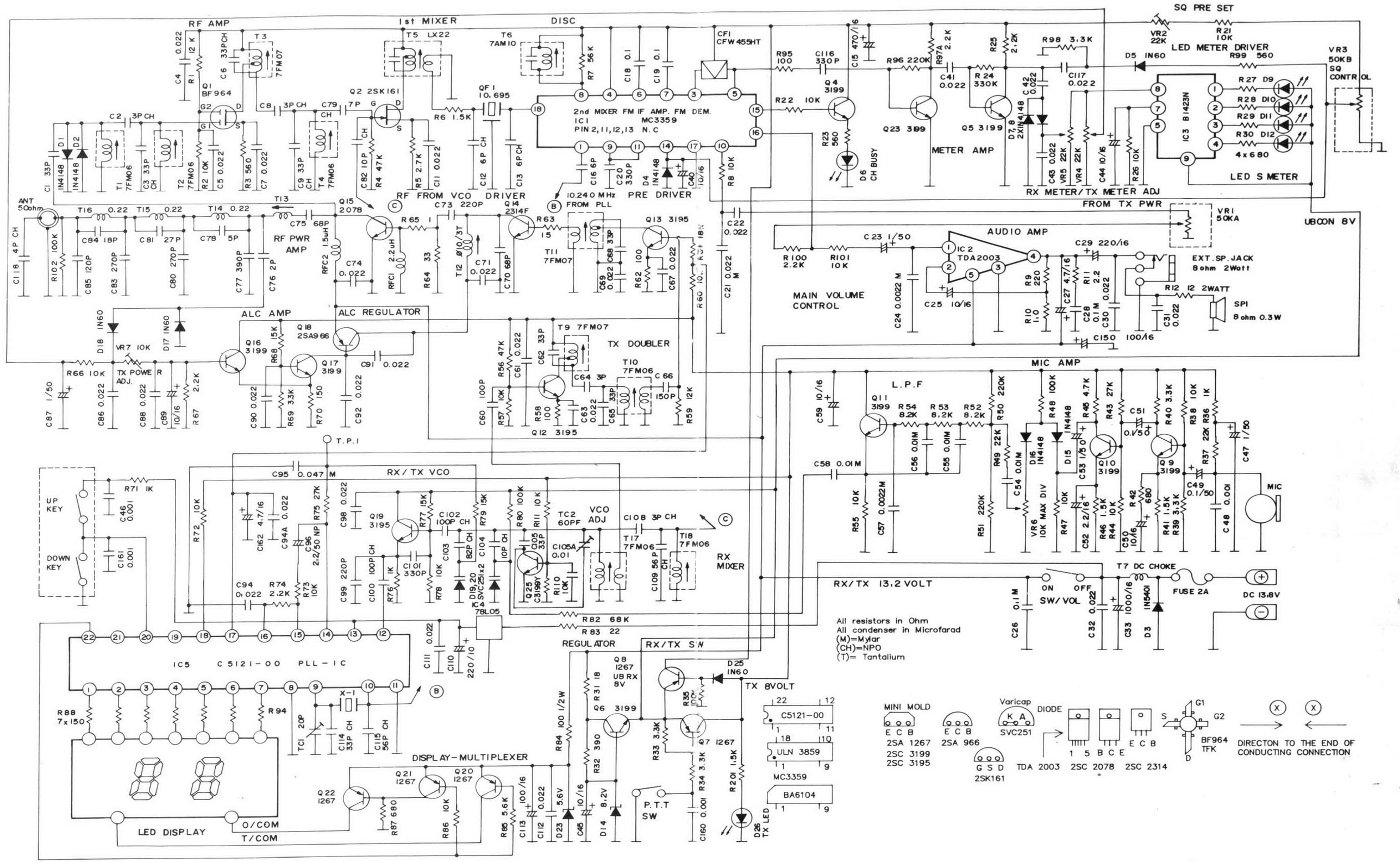

http://cb.cwa1.net