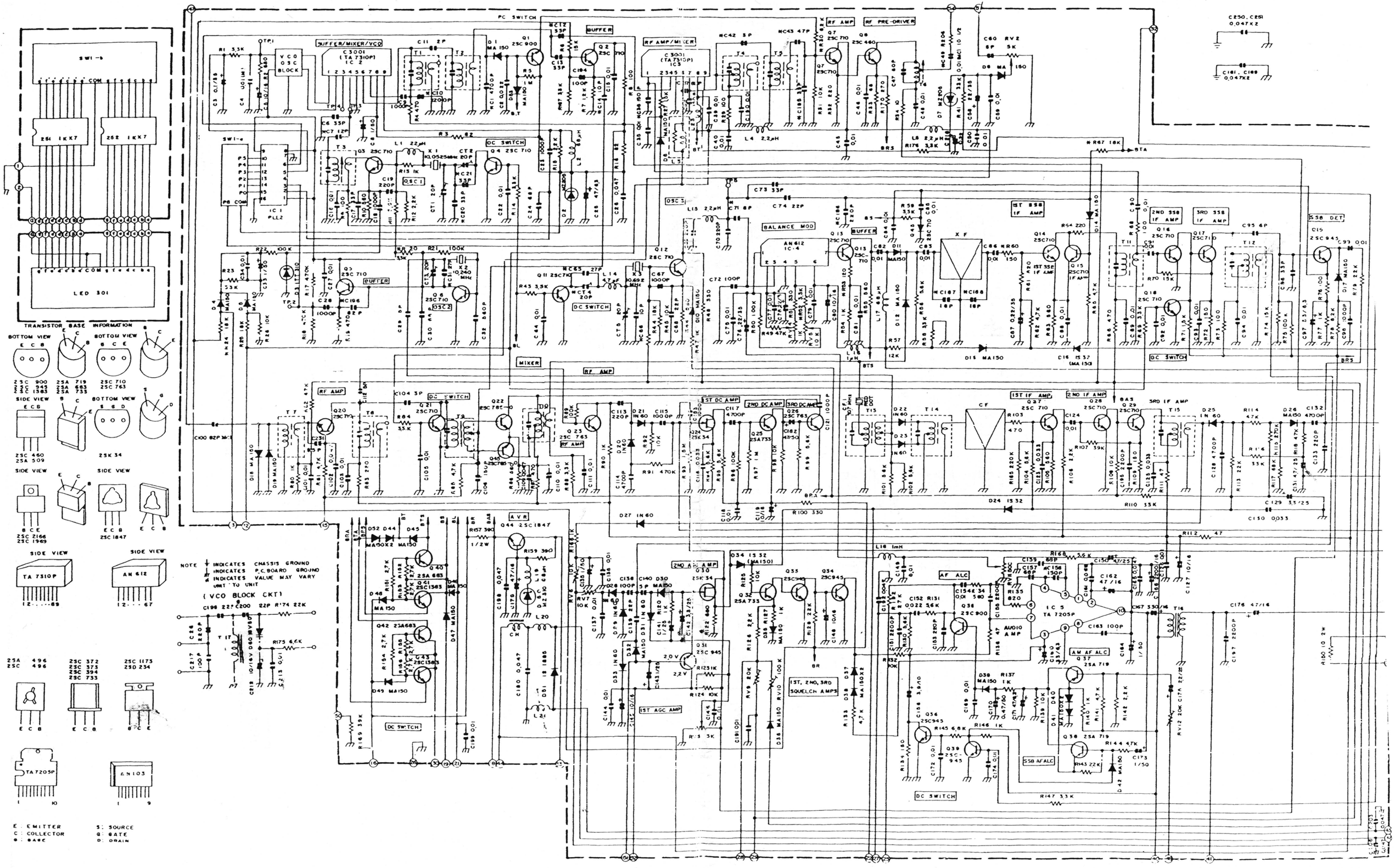
PC SWITCH
BUFFER
RF AMP/MIXER
RF AMP
RF PRE-DRIVER
BUFFER/MIXER/VCO
VCO OSC BLOCK
C3001 (TA7310P) IC2
C3001 (TA7310P) IC3
DC SWITCH
OSC 1
OSC 2
OSC 3
BALANCE MOD
AN612 IC-4
1ST SSB IF AMP
2ND SSB IF AMP
3RD SSB IF AMP
SSB DET
MIXER
1ST DC AMP
2ND DC AMP
3RD DC AMP
1ST IF AMP
2ND IF AMP
3RD IF AMP
AVR
2ND AGC AMP
1ST AGC AMP
1ST, 2ND, 3RD SQUELCH AMPS
AF ALC
AUDIO AMP
IC 5 TA 7205P
AM AF ALC
SSB AF ALC
LED 301
TRANSISTOR BASE INFORMATION
BOTTOM VIEW
SIDE VIEW
TA 7310P
AN 612
TA 7205P
E : EMITTER
C : COLLECTOR
B : BASE
S : SOURCE
G : GATE
D : DRAIN