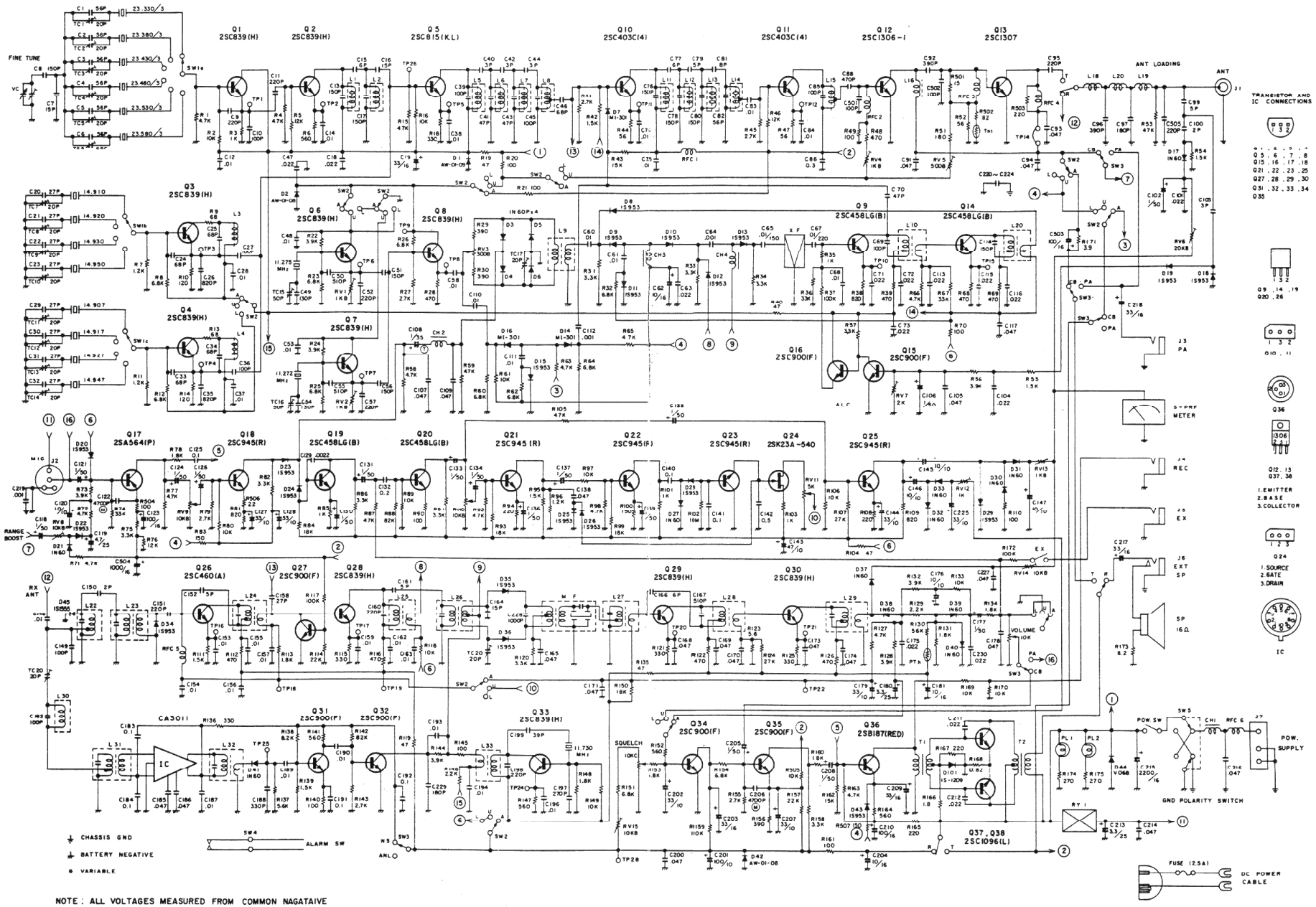

NOTE : ALL VOLTAGES MEASURED FROM COMMON NAGATAIVE CHASSIS GROUND WITH VTVM AT NO SIGNAL.

Lafayette RADIO ELECTRONICS CORPORATION
111 Jericho Turnpike, Syosset, L.I. New York 11791

TELSAT SSB-50A SCHEMATIC DIAGRAM

Printed in Japan